A4

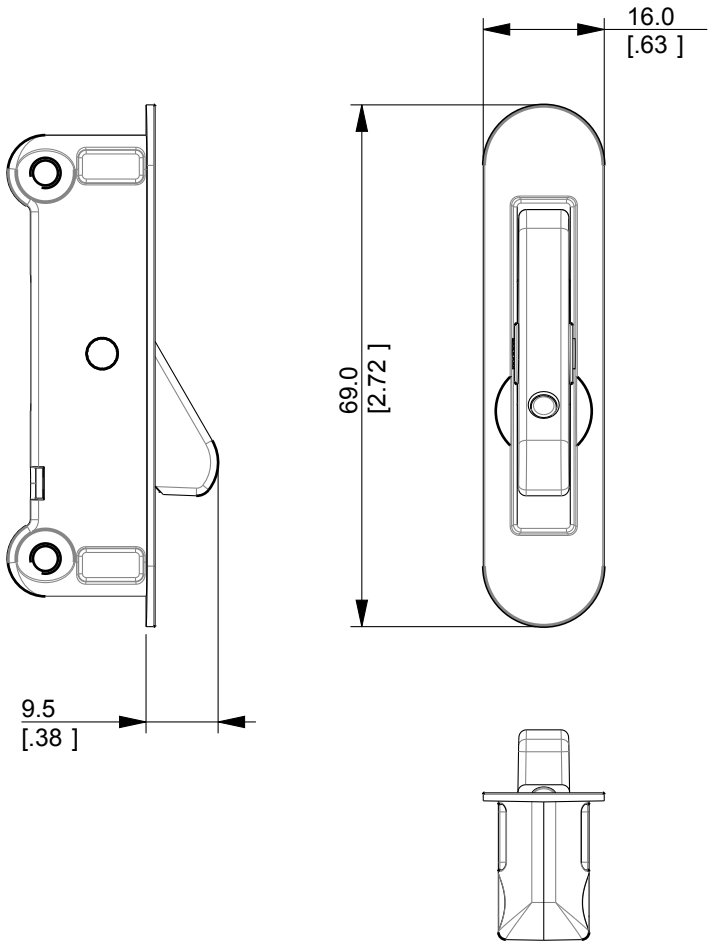

ANGELS

ISSUE	REVISIONS	DATE

MIGHTON PRODUCTS LTD

Mighton Products are protected under the provisions
of the Copyright Designs and Patents Act 1988.
Unauthorised copying of our products constitutes an offence under the Act.

TITLE	SIDE FIT ANGEL	CLIENT			DRAWN	RPH	DATE 24-FEB-10
		JOB NO.			CHECKED		DATE
MATERIAL		VIEW	3rd Angle		APPROVED		DATE
COLOUR/FINISH		SCALE DRAWN		SHEET 1	DRG.NO.	ANGELS	
		ISSUE	A	OF 1			