A4

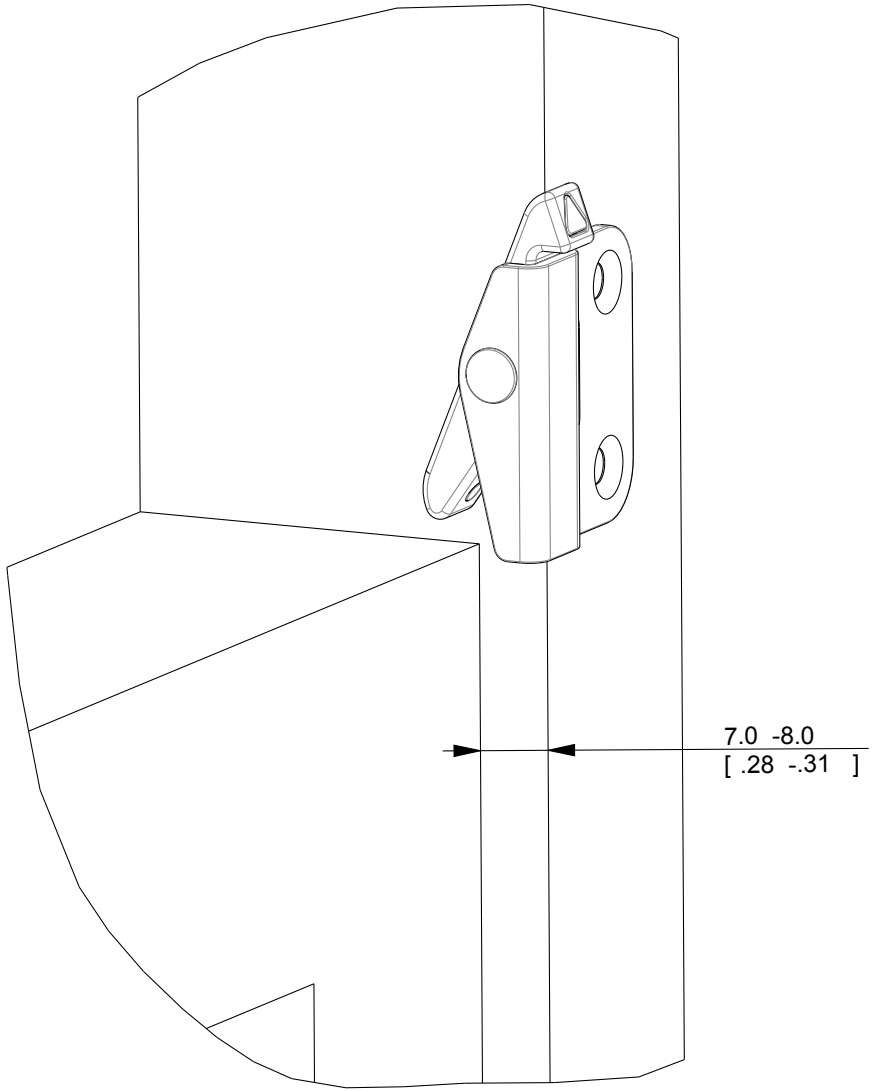

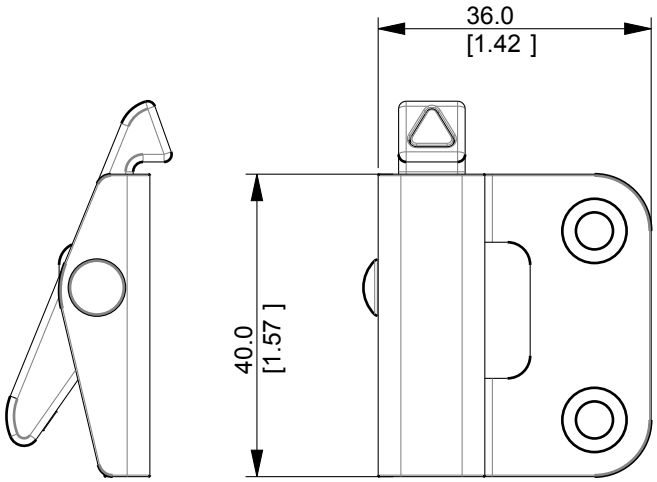

SB78

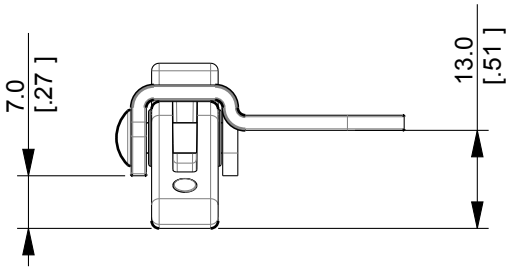

NOTES.
1. ITEM SUPPLIED IN MATCHED PAIRS, RIGHT HAND SIDE SHOWN ABOVE.

ISSUE	REVISIONS	DATE

MIGHTON PRODUCTS LTD	TITLE	REVERSE RETRO FIT ANGEL	CLIENT		DRAWN	RPH	DATE 23-FEB-10
			JOB NO.		CHECKED		DATE
	MATERIAL		VIEW	3rd Angle	APPROVED		DATE
	COLOUR/FINISH		SCALE DRAWN	SHEET 1	DRG.NO.	SB78	
			ISSUE	A OF 1			

Mighton Products are protected under the provisions
of the Copyright Designs and Patents Act 1988.
Unauthorised copying of our products constitutes an offence under the Act.